ANNOVI REVERBERI
The Power of Experience

Modello VIP PRO 150

Version:
Serial number:
Code: **15303**

25/01/2022

127 V - 60 Hz | **nema**

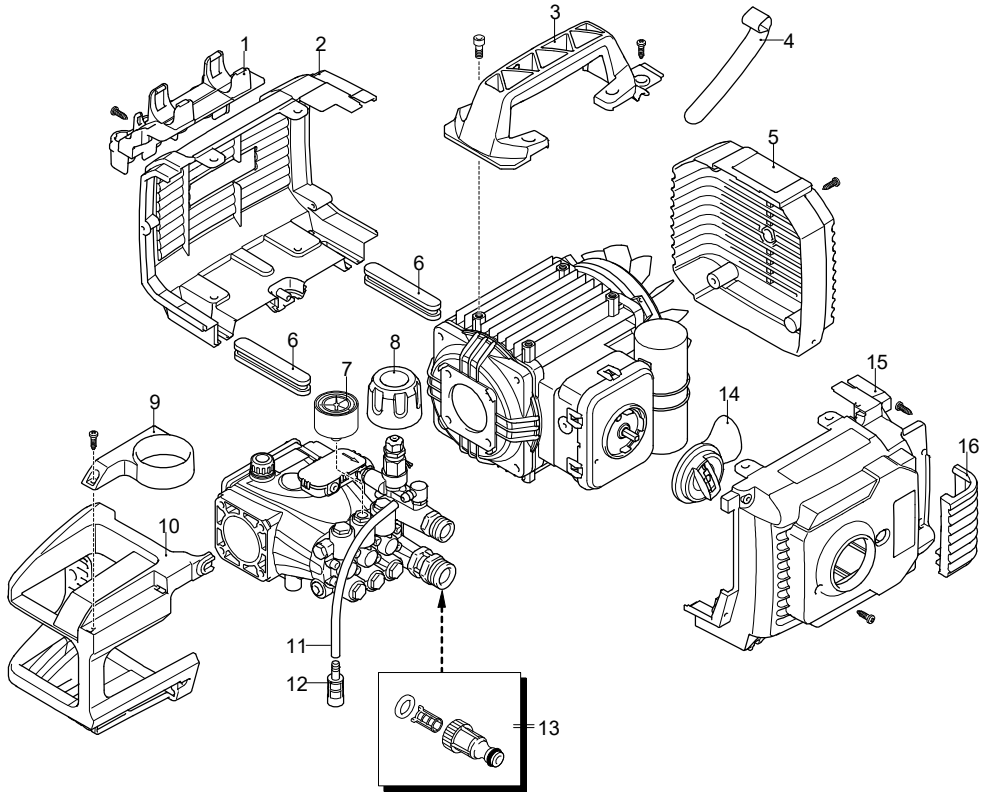

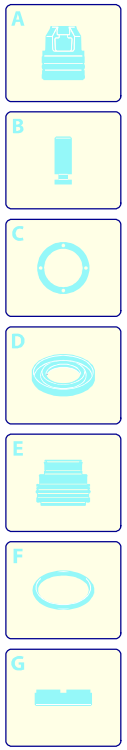

Validity	Pos.	Code	Description	Q
	1	5080100	Accessories carrier	1
	2	5080020	Casing	1
	3	5080030	Handle	1
	4	4880170	Clamp	1
	5	5080040	Fan cowling	1
	6	4240540	Rubber foot	2
	7	43456	Pressure gauge	1
	8	3961260	Knob	1
	9	5080080	Support	1
	10	5080050	Guard	1
	11	1270960	Detergent hose	1
	12	1341030	Filter	1
	13	3082130	Water coupling kit	1
	14	5080140	Knob	1
	15	5080010	Casing	1
	16	5080070	Guard	1

ANNOVI REVERBERI
The Power of Experience

Modello VIP PRO 150

Version:
Serial number:
Code: **15303**

25/01/2022

127 V - 60 Hz | **nema**

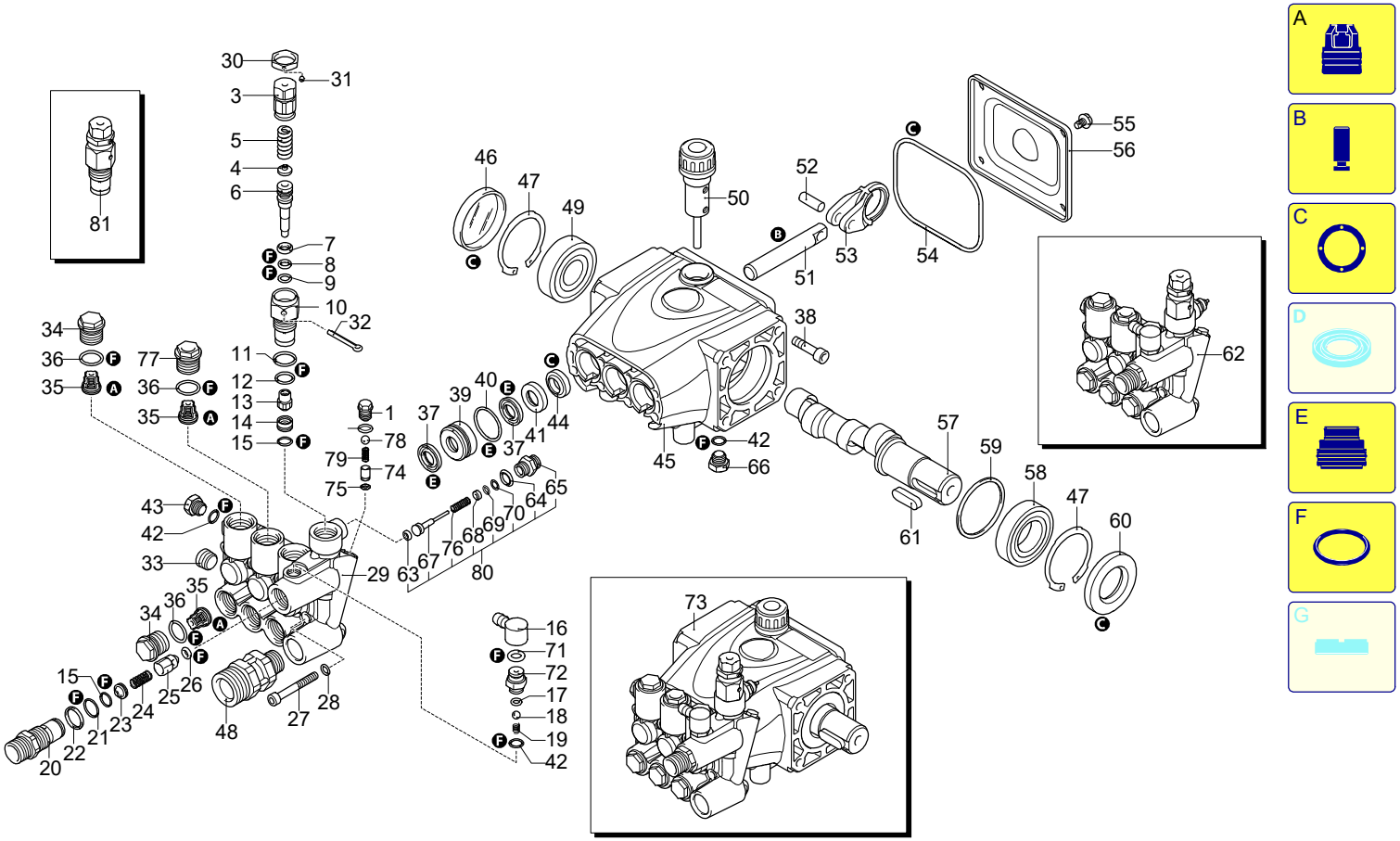

A
B
C
D
E
F
G

UN_CE_3083-UA

Validity	Pos.	Code	Description	Q
	1	3720730	Plug	1
	2	1682800	O-ring	1
	3	3800960	Screw	1
	4	1980220	Plate	1
	5	4140620	Spring	1
	6	4140170	Piston	1
	7	2260100	O-ring	1
	8	660190	O-ring	1
	9	2760210	Ring	1
	10	3800970	Piston guide	1
	11	740290	O-ring	1
	12	820510	O-ring	1
	13	3800230	Piston	1
	14	2841080	Seat	1
	15	1470210	O-ring	2
	16	2320180	Hose tail	1
	17	480480	O-ring	1
	18	1250280	Ball	1
	19	1560520	Spring	1
	20	2761150	Fitting	1
	21	2760270	O-ring	1
	22	394280	O-ring	1
	23	2760120	Injector	1
	24	2760200	Spring	1
	25	2761511	Shutter	1
	26	2101770	O-ring	1
	27	1345180	Screw	8
	28	4140140	Washer	8
	29	4140650	Head	1
	30	3800200	Nut	1
	31	3800240	Screw	1
	32	2500550	Split pin	1
	33	2760260	Plug	2
	34	2841530	Plug	5
	35	2849051	Complete valve	6
	36	2841520	O-ring	6
	37	2200143	Water seal	6
	38	880280	Screw	4
	39	2840550	Bushing	3
	40	770590	O-ring	3
	41	2841390	Bushing	3
	42	3700250	O-ring	3
	43	2841800	Plug	1
	44	1683500	Oil seal	3
	45	4140010	Pump body	1
	46	4140150	Cover	1
	47	4140360	Ring	2
	48	4140570	Fitting	1
	49	4140110	Bearing	1
	50	4140210	Plug	1
	51	4140060	Piston	3
	52	4140070	Pin	3
	53	4140080	Connecting-rod	3
	54	4140090	O-ring	1
	55	4140270	Screw	4
	56	4140030	Cover	1
	57	4140330	Shaft	1
	58	4140100	Bearing	1
	59	4140190	Ring	1
	60	4140200	Oil seal	1
	61	1380520	Key	1
	62	47000	Head assembly	1

ANNOVI REVERBERI
The Power of Experience

Modello VIP PRO 150

Version:
Serial number:
Code: **15303**

25/01/2022

127 V - 60 Hz | **nema**

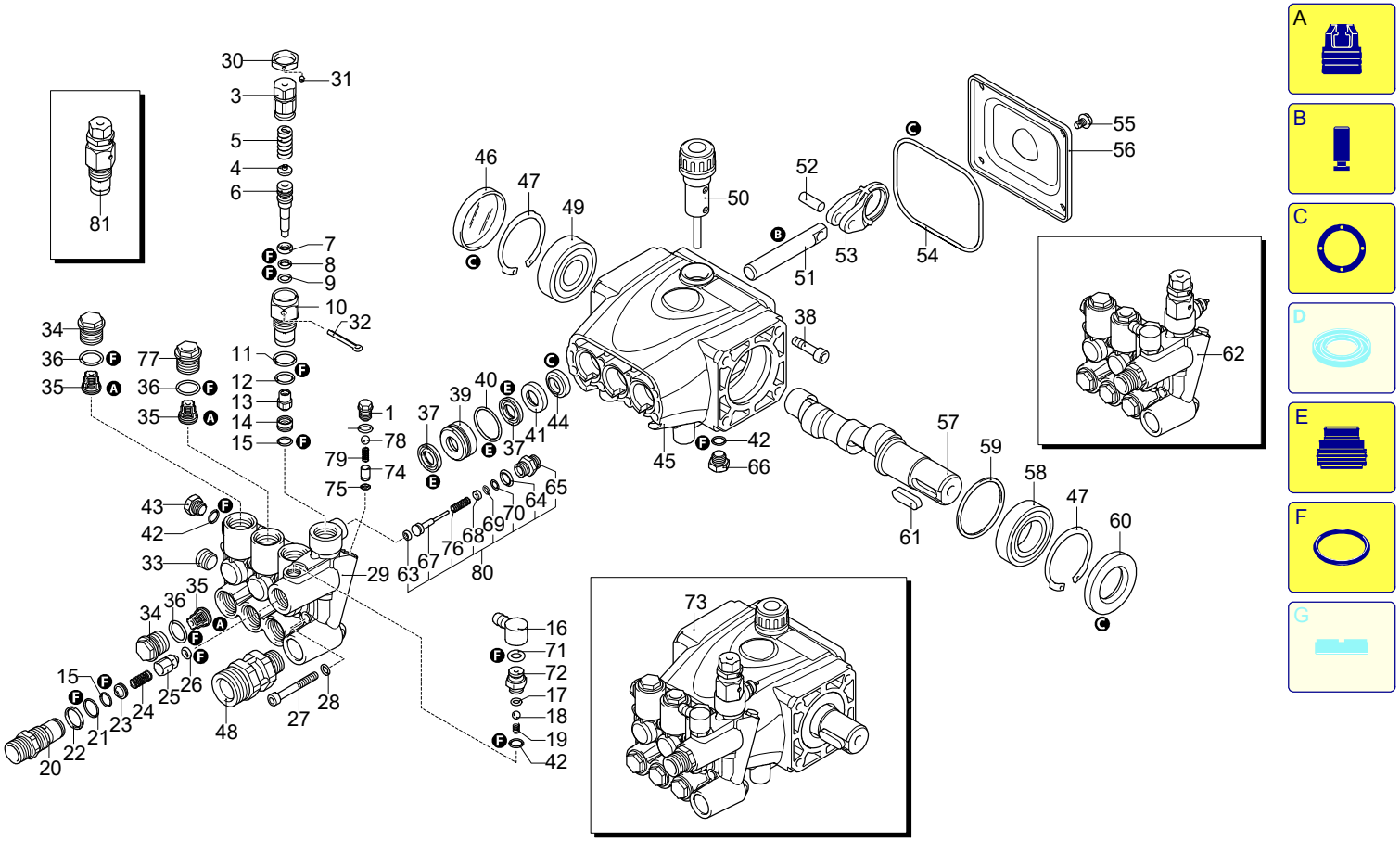

UN_CE_3083-UA

Validity	Pos.	Code	Description	Q
	63	1120681	O-ring	1
	64	600180	O-ring	1
	65	4140640	Plug	1
	66	2841800	Plug	1
	67	4140420	Pin	1
	68	2021650	Washer	1
	69	1260820	O-ring	1
	70	3740050	Ring	1
	71	480560	O-ring	1
	72	1344620	Fitting	1
	73	47001	Pump assembly	1
	74	3721210	Seat	1
	75	3720750	O-ring	1
	76	2260460	Spring	1
	77	2900350	Plug	1
	78	1982240	Ball	1
	79	3720760	Spring	1
	80	46936	TSS Retrofit kit	1
	81	46935	Valve kit adjustment	1
	A	43478	Valve kit	1
	B	43479	Piston kit	1
	C	43480	Oil seal kit	1
	E	46983	Water seal kit	1
	F	43482	Gasket kit	1

ANNOVI REVERBERI
The Power of Experience

Modello VIP PRO 150

Version:
Serial number:
Code: **15303**

25/01/2022

127 V - 60 Hz | **nema**

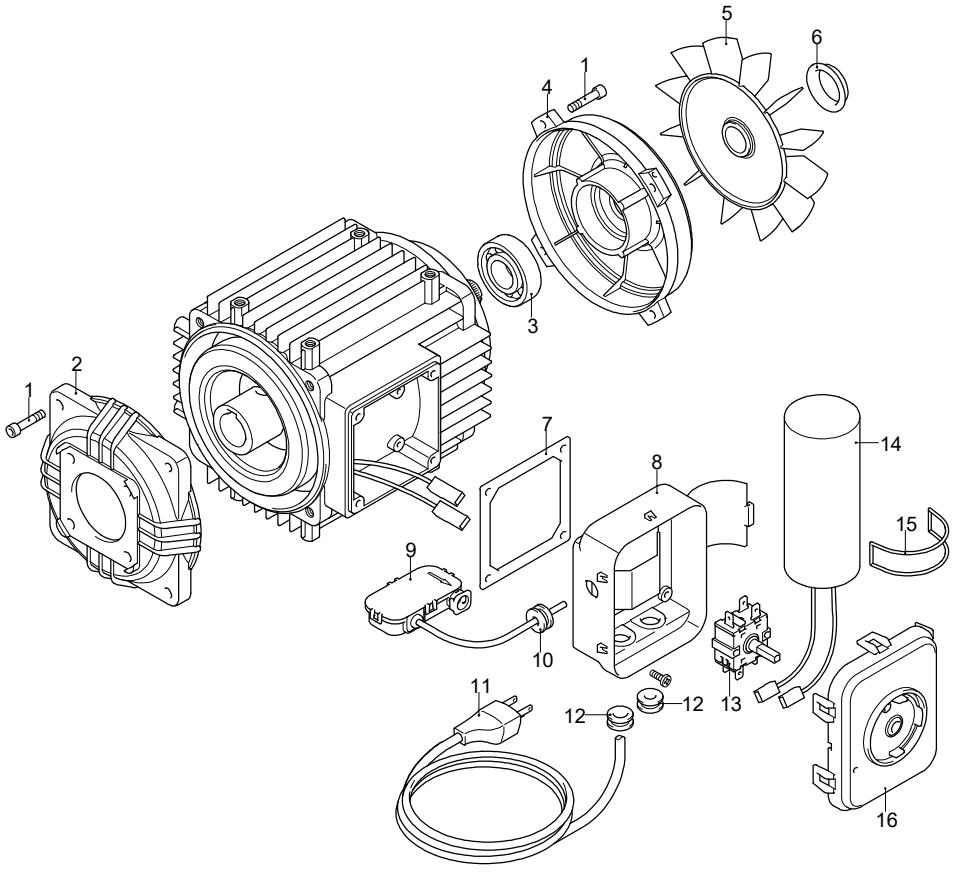

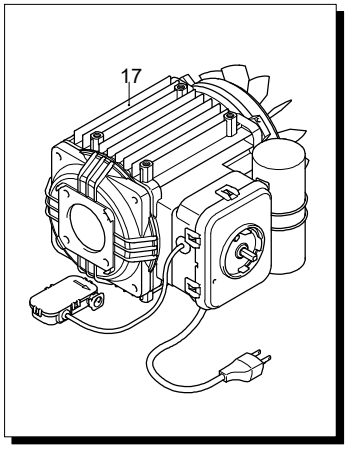

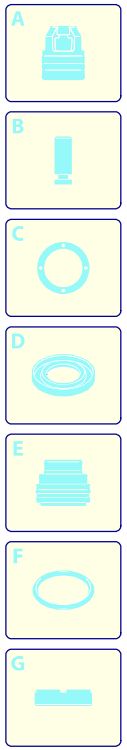

Validity	Pos.	Code	Description	Q
	1	1260780	Screw	8
	2	4760050	Flange	1
	3	4760240	Bearing	1
	4	4760080	Shield	1
	5	4766210	Fan	1
	6	4760250	Ring nut	1
	7	4760260	Gasket	1
	8	5080120	Box	1
	9	46326	TSS box assembly	1
	10	2021480	Gland	1
	11	2901210	Cable	1
	12	1462900	Gland	2
	13	4382540	Switch	1
	14	4760680	Capacitor	1
	15	2320640	O-ring	1
	16	5080130	Cover	1
	17	47002	Motor	1

UN_CE_3084-IJ

ANNOVI REVERBERI
The Power of Experience

Modello VIP PRO 150

Version:
Serial number:
Code: **15303**

25/01/2022

127 V - 60 Hz | **nema**

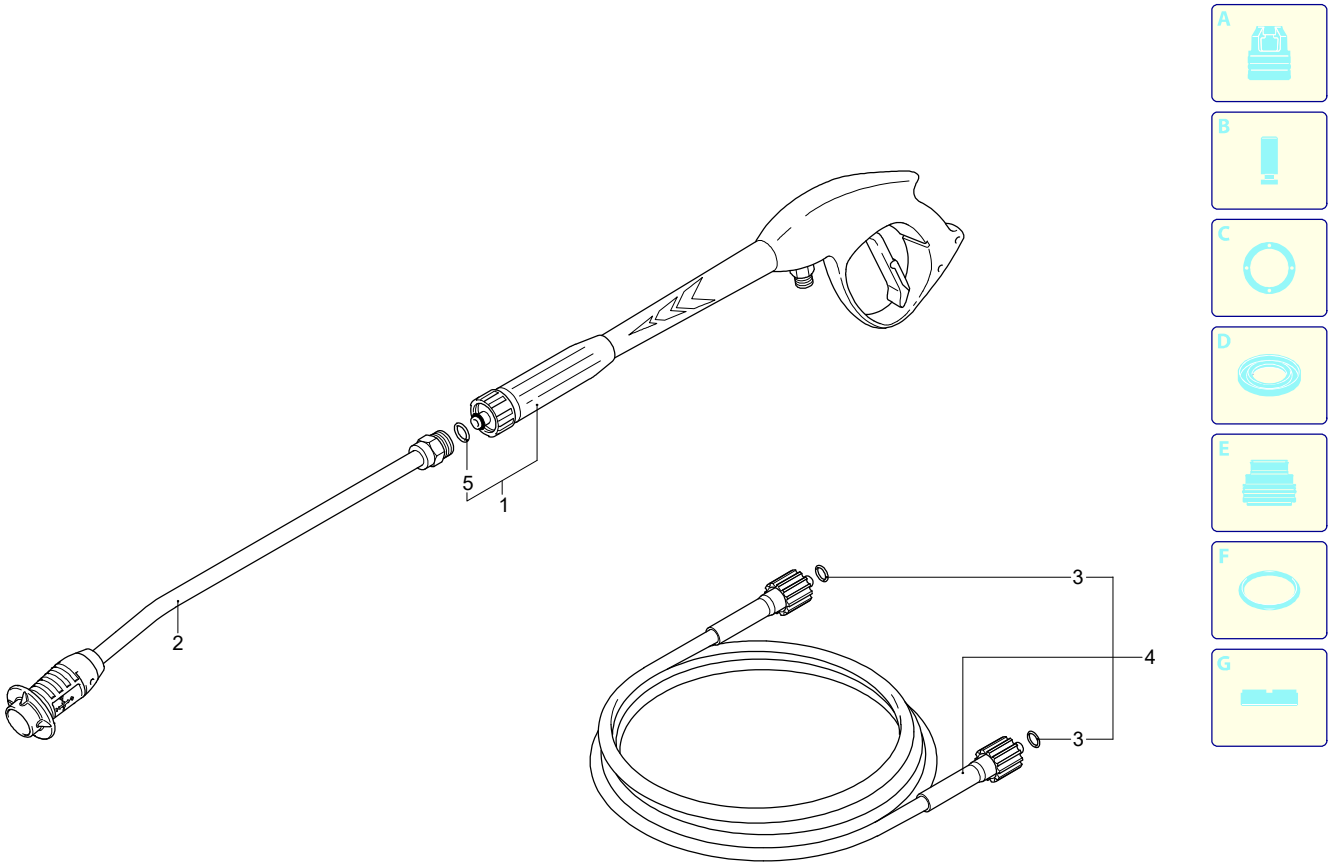

Validity	Pos.	Code	Description	Q
	1	46880	Gun	1
	2	46814	Lance+lance head	1
	3	2000770	O-ring	2
	4	3960920	High pressure hose	1
	5	391000	O-ring	1

UN_CE_2522-AL