SUPREME 75

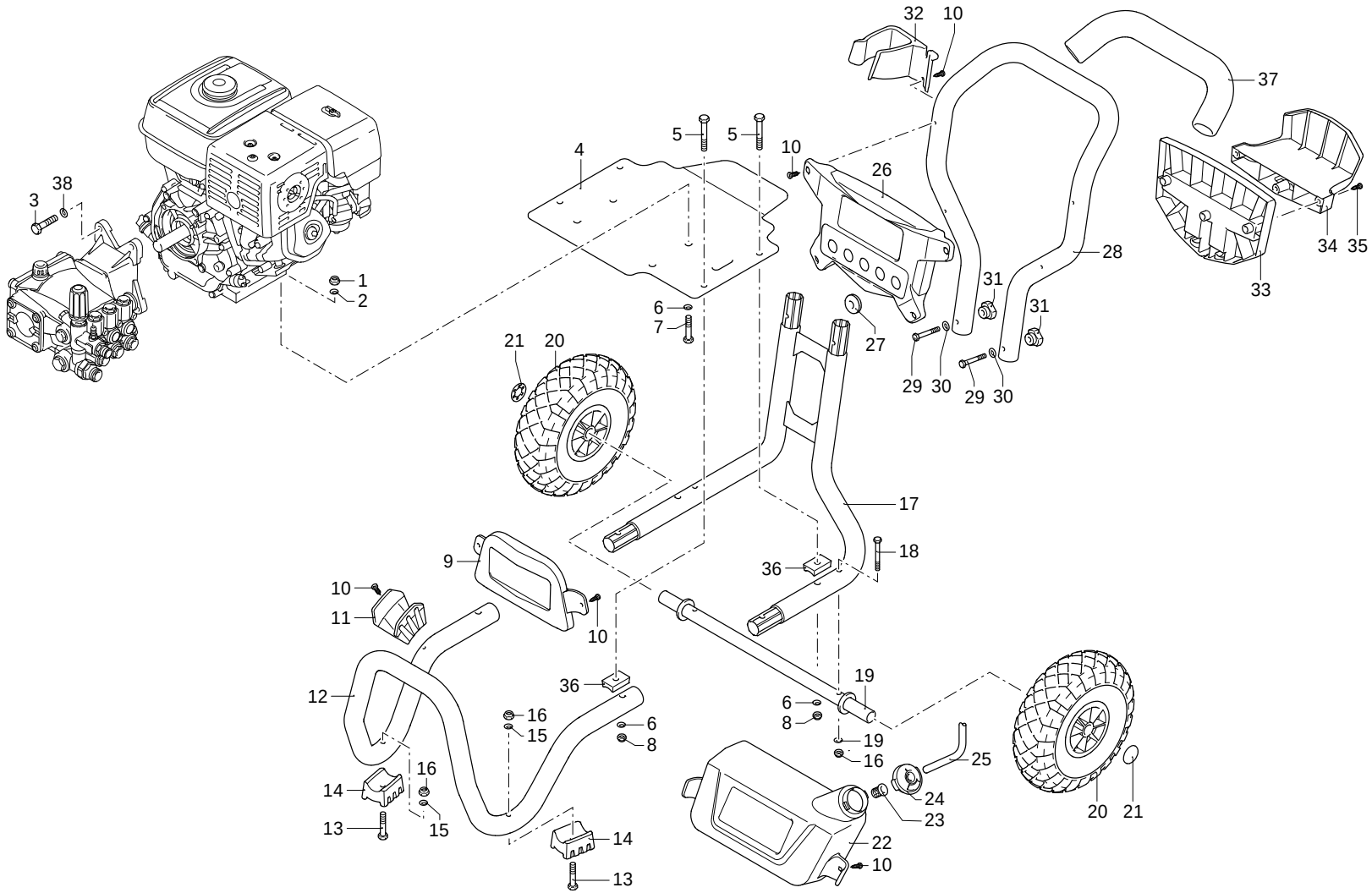

AR-0_10-045_v01

P	Code	Q
1	2240110	4
2	320620	4
3	620610	4
4	4000091	1
5	380210	4
6	390311	8
7	200230	4
8	2240110	4
9	4000303	1
10	2060200	8
11	4000240	1
12	4000101	1
13	4000390	2
14	4000401	2
15	3163290	4
16	3000170	4
17	4000081	2
18	4000390	2
19	4001111	1
20	4000910	2
21	50016	2
22	4000290	1
23	2000230	1
24	4000750	1
25	2901000	1
26	4000225	1
27	4000790	5
28	4000111	1
29	4000360	2
30	4000860	2
31	50019	2
32	4000210	1
33	4000235	1
34	4000265	1
35	2100300	3
36	4000350	4
37	4000800	1
38	390311	4

-

-

09/06/2023

SUPREME 75

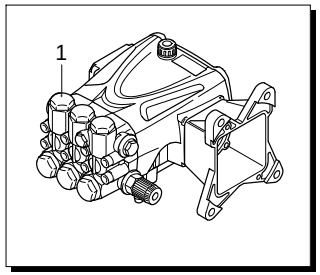

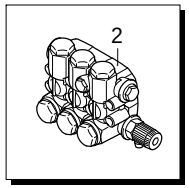

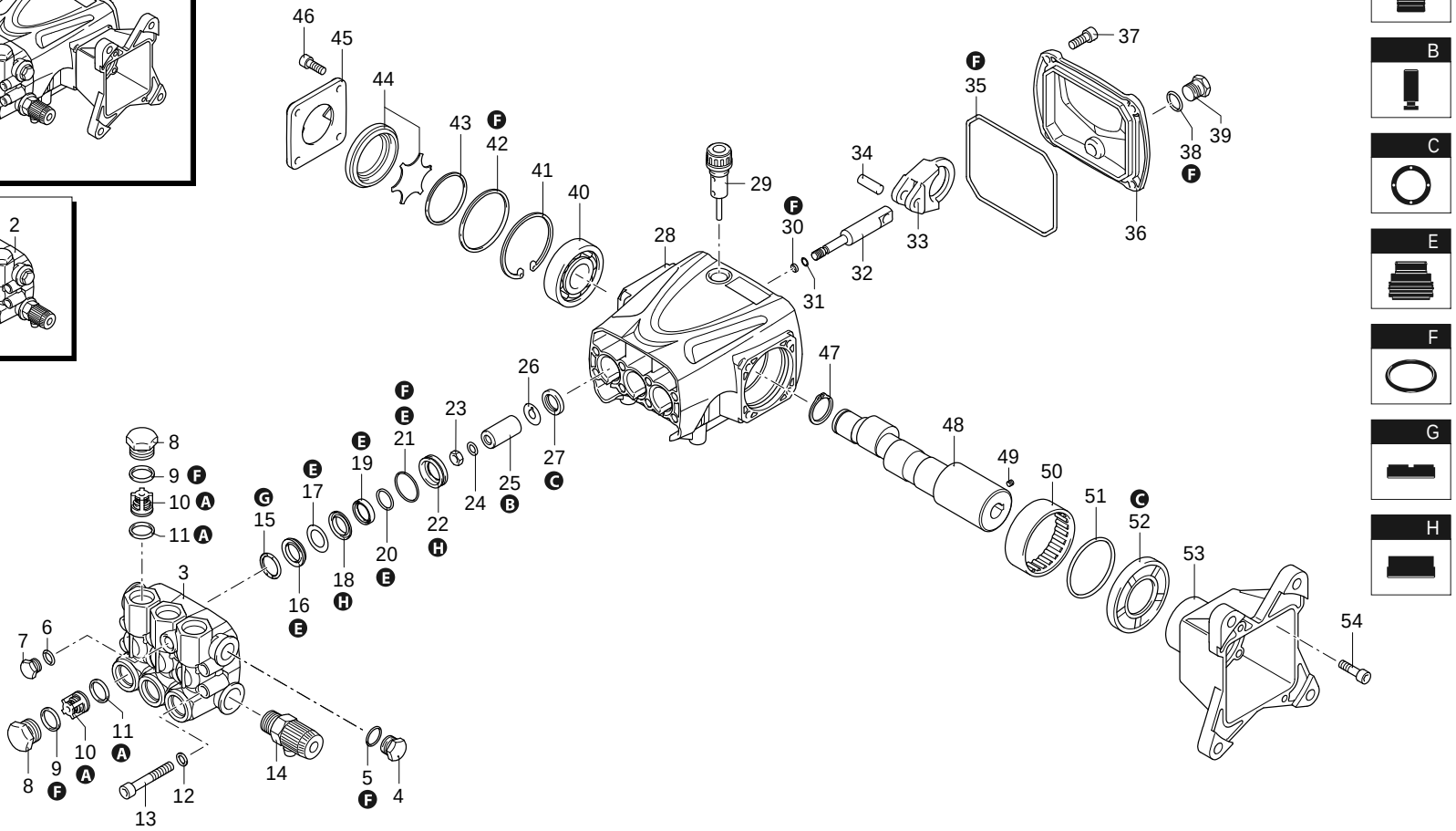

AR-0_003018_v01

	-
	-

20/04/2023

P	Code	Q
1	26193	1
2	3229210	1
3	3220090	1
4	740290	1
5	1980740	1
6	820510	1
7	880581	1
8	960090	6
9	960160	6
10	889052	6
11	880830	6
12	1381850	8
13	800860	8
14	2761610	1
15	2760220	3
16	1342761	3
17	3200680	3
18	3220150	3
19	3200690	3
20	3200700	3
21	770260	3
22	3220140	3
23	1260110	3
24	1260100	3
25	1780070	3
26	1260091	3
27	1260460	3
28	3220010	1
29	880130	1
30	480480	3
31	1080550	3
32	3220060	3
33	3220040	3
34	3220070	3
35	651540	1
36	3220030	1
37	3200220	1
38	820510	1
39	880581	1
40	1981210	1
41	200390	1
42	3220780	1
43	650560	1
44	3229603	1
45	3200070	1
46	1200430	4
47	1260770	1
48	3220240	1
49	820440	1
50	3220260	1
51	3220430	1

SUPREME 75

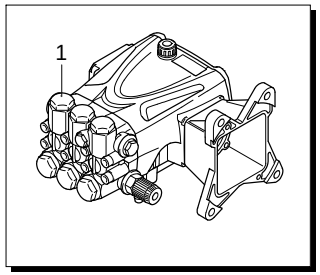

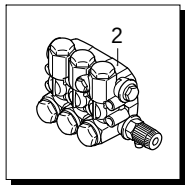

P	Code	Q
52	3220270	1
53	3220250	1
54	780060	4
A	1828	1
B	2739	1
C	42555	1
E	42556	1
F	42550	1
G	2191	1
H	42557	1

AR-0_003018_v01

-

-

20/04/2023

SUPREME 75

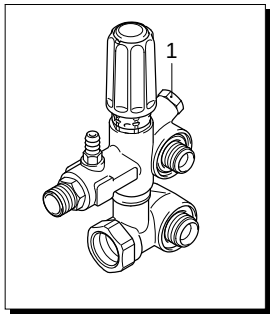

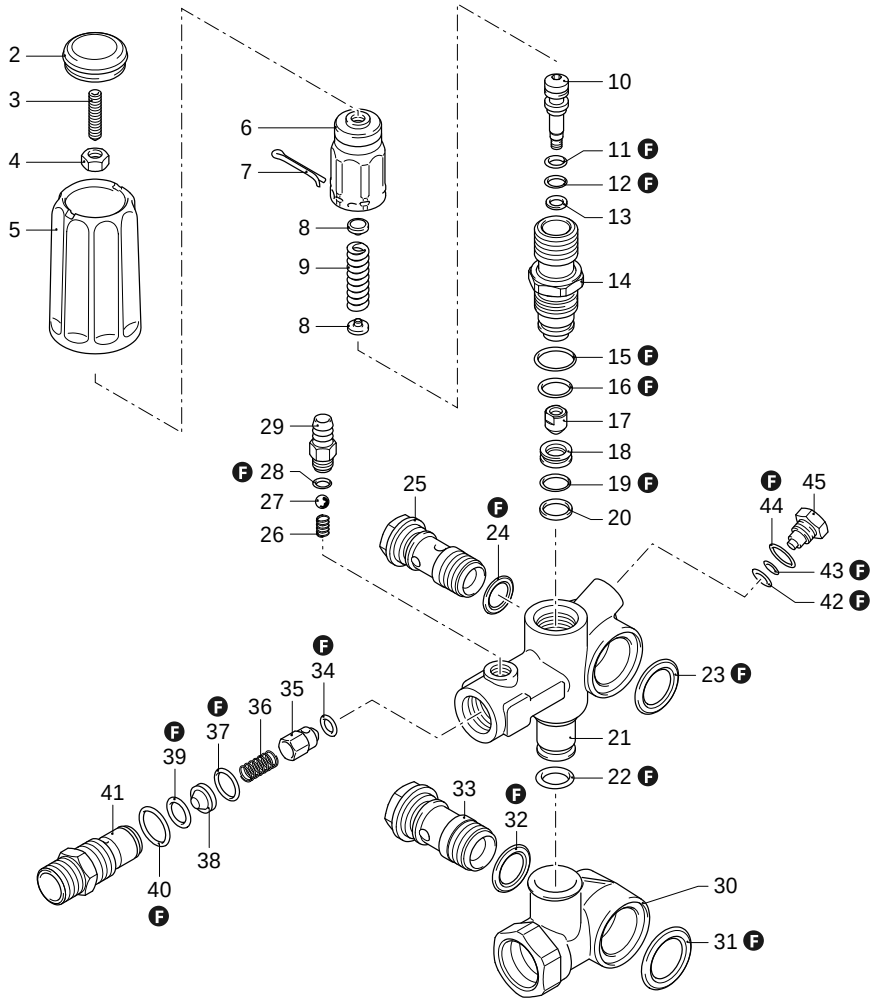

F



P	Code	Q
1	25745	1
2	3200500	1
3	2840970	1
4	1060120	1
5	3740030	1
6	2500540	1
7	2500550	1
8	1980220	2
9	2760410	1
10	2760400	1
11	2260100	1
12	660190	1
13	2760210	1
14	2760570	1
15	1200690	1
16	394280	1
17	2260070	1
18	2760980	1
19	770140	1
20	2760640	1
21	3740010	1
22	390080	1
23	2260190	1
24	390080	1
25	1540272	1
26	1560520	1
27	1250280	1
28	480480	1
29	1982520	1
30	3740020	1
31	1540630	1
32	880270	1
33	2260420	1
34	2101770	1
35	2760131	1
36	2760200	1
37	2760270	1
38	2760120	1
39	1470210	1
40	394280	1
41	2760230	1
42	1120681	1
43	2260480	1
44	600180	1
45	3740100	1
F	43017	1

AR-0_11-015_v01

-

-

20/04/2023

SUPREME 75

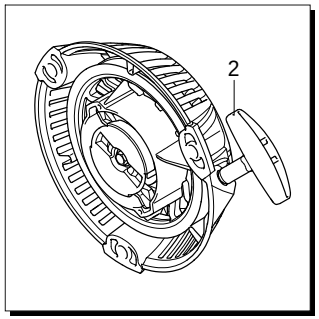

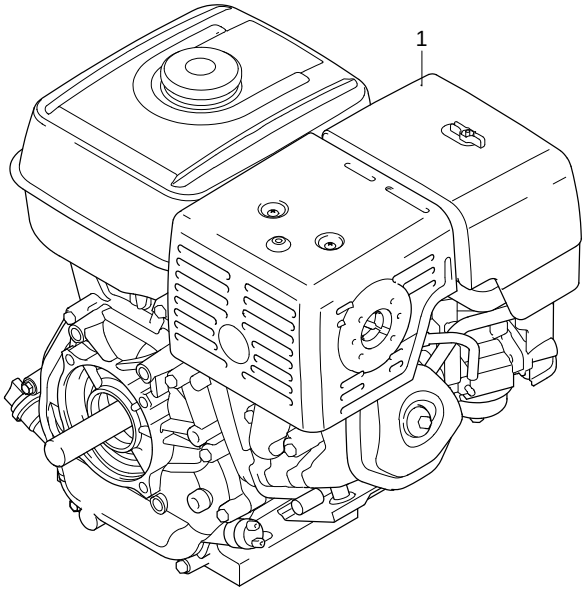

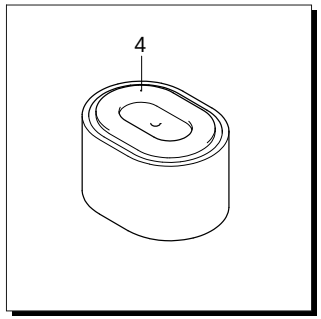

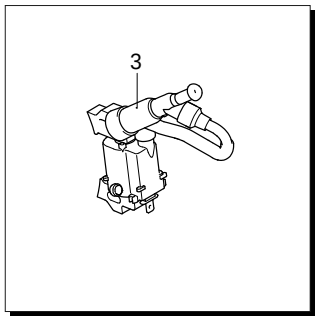

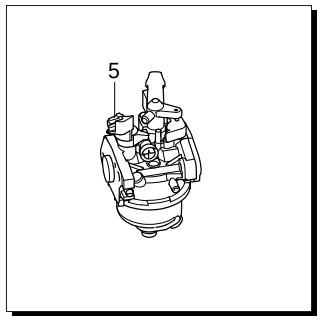

AR-0_05-014_v01

P	Code	Q
1	44943	1
2	51798	1
3	51805	1
4	51797	1
5	51804	1
5	52329	1

-

-

20/04/2023

SUPREME 75

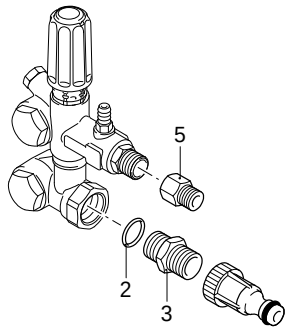

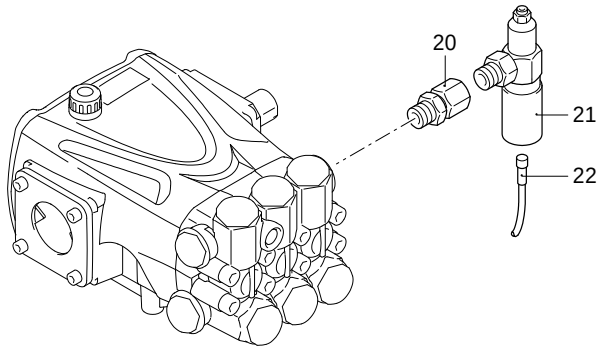

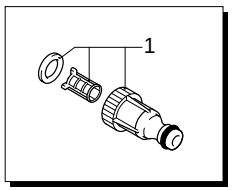

AR-0_22-021_v01

P	Code	Q
1	3082130	1
2	480440	1
3	3600760	1
5	1122260	1
20	3960750	1
21	51534	1
22	52138	1

-

-

20/04/2023

SUPREME 75

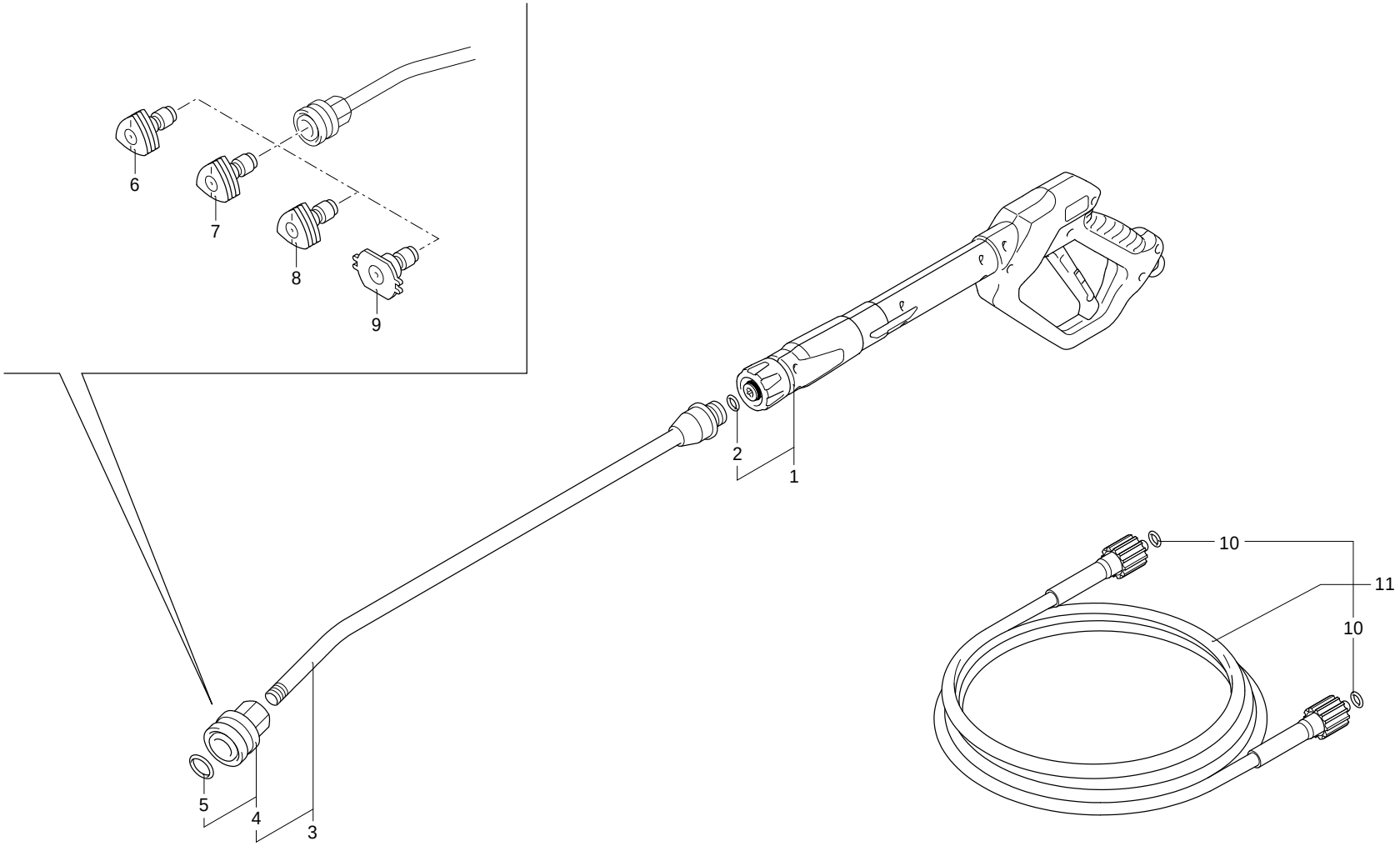

AR-0_02-023_v01

P	Code	Q	
1	47033	1	>I 02/22
1	47039	1	I> 03/22
2	391000	1	
3	3600650	1	
4	46055	1	
5	391002	1	
6	3600350	1	
7	3600360	1	
8	3600380	1	
9	3600400	1	
10	2000570	2	
11	47034	1	>I 02/22
11	4001180	1	I> 03/22

-

-

20/04/2023