SUPREME 43

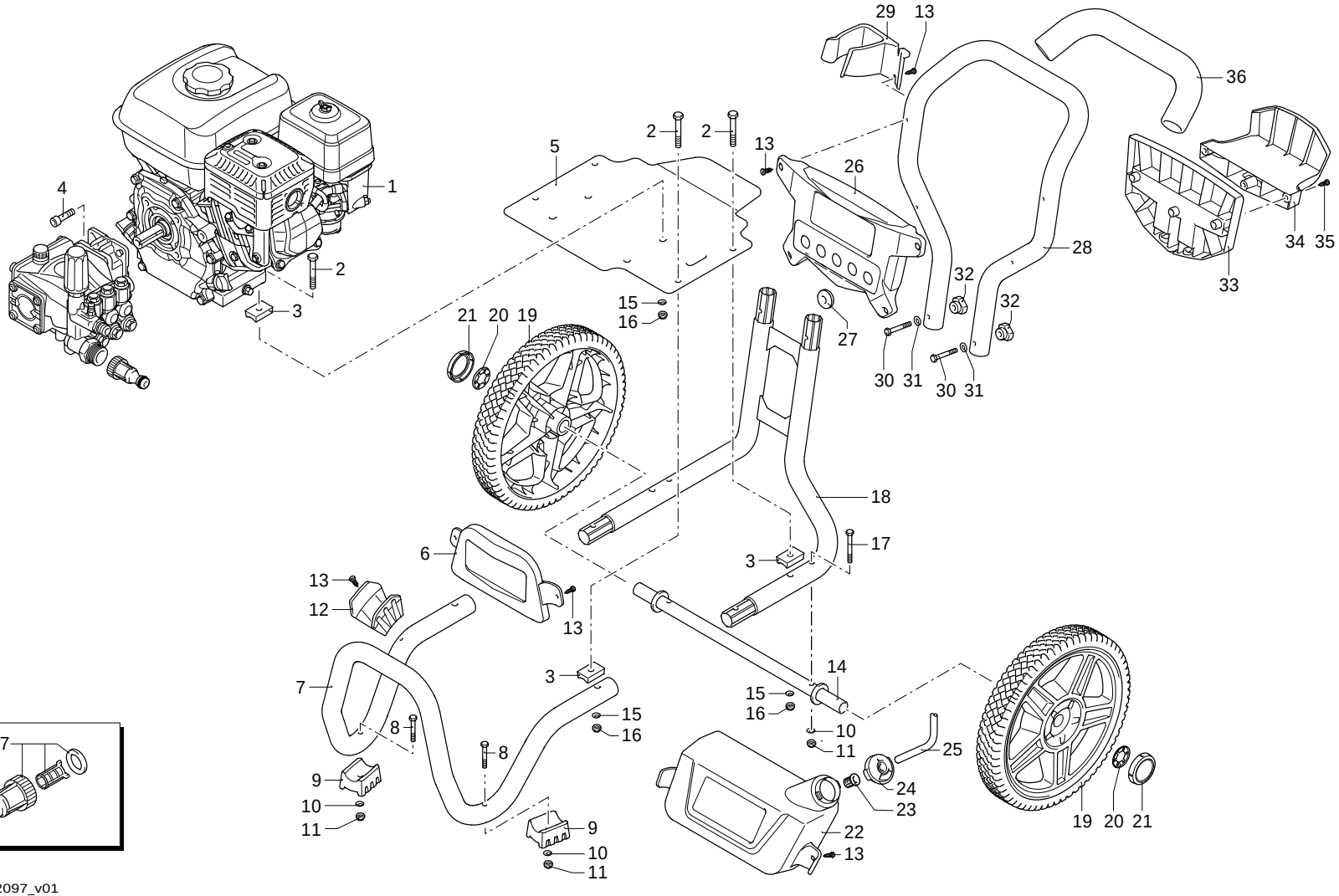

AR-0_002097_v01

P	Code	Q
1	44986	1
2	621780	4
3	4000350	8
4	180432	4
5	4000031	1
6	4000185	1
7	4000051	1
8	4000370	2
9	4000400	2
10	550331	4
11	3000170	4
12	4000240	1
13	2060200	8
14	4000121	1
15	390311	8
16	160311	8
17	4000830	1
18	4000011	1
19	4000320	2
20	380620	2
21	4000821	2
22	4000160	1
23	2000230	1
24	4000750	1
25	1270960	1
26	4000225	1
27	4000790	5
28	4000061	1
29	4000210	1
30	4000360	2
31	4000860	2
32	50019	2
33	4000235	1
34	4000265	1
35	2100300	3
36	4000770	1
37	3082130	1

-

-

20/04/2023

SUPREME 43

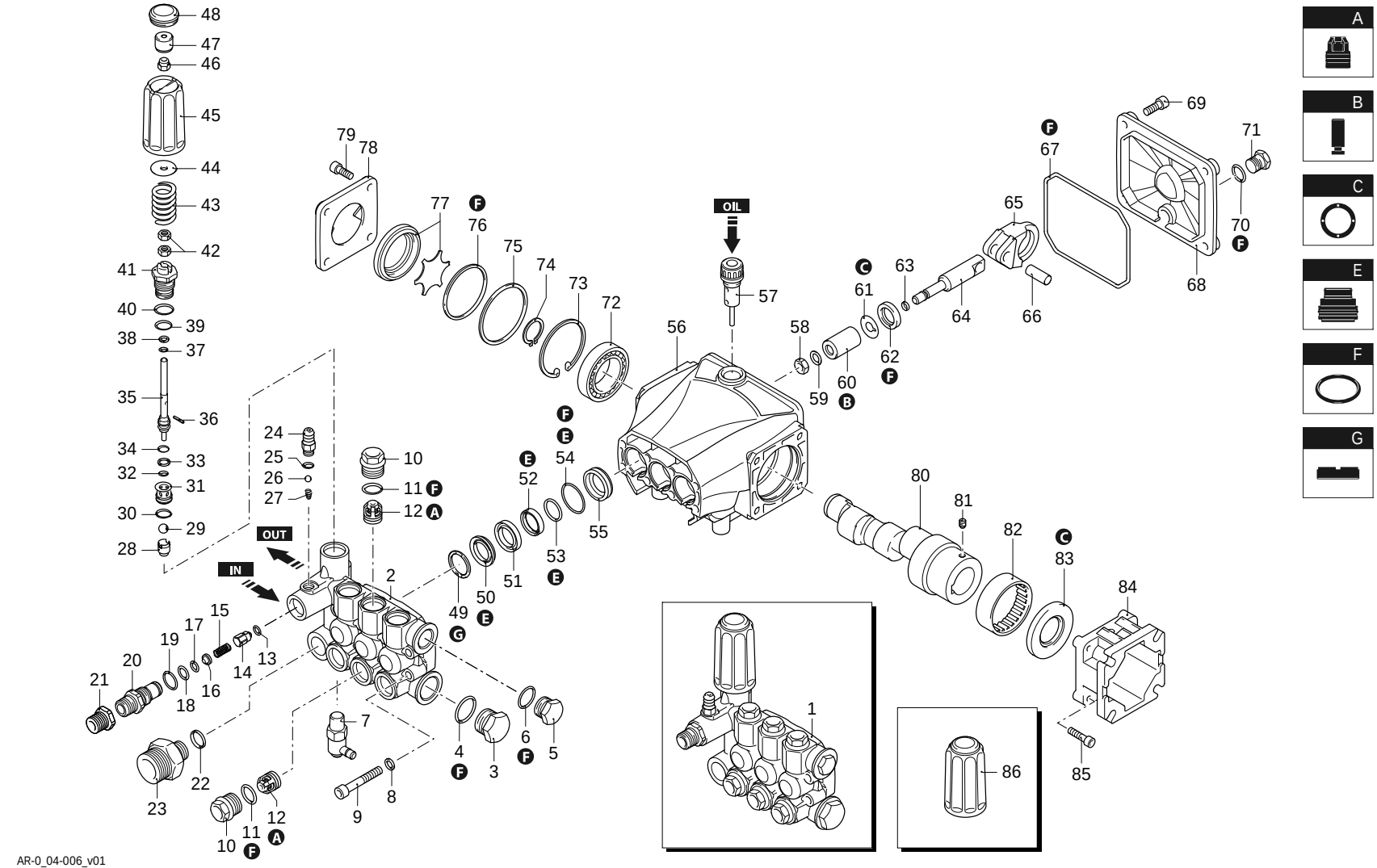

P	Code	Q
1	43800	1
2	3200930	1
3	820361	1
4	180101	1
5	1980740	1
6	740290	1
7	2761580	1
8	1381550	8
9	800410	8
10	3200110	6
11	1200690	6
12	2769050	6
13	2101770	1
14	2760131	1
15	2760200	1
16	2761550	1
17	1470210	1
18	2760270	1
19	394280	1
20	2760230	1
21	1122260	1
22	2840890	1
23	2841070	1
24	1982520	1
25	480480	1
26	1250280	1
27	1560520	1
28	3200560	1
29	3200590	1
30	770140	1
31	3200550	1
32	660191	1
33	1080401	1
34	480560	1
35	3200510	1
36	3201820	1
37	770090	1
38	3200540	1
39	394280	1
40	1200690	1
41	3200530	1
42	1980300	2
43	3201340	1
44	3200600	1
45	3200480	1
46	3000170	1
47	3200520	1
48	3200500	1
49	2760220	3
50	1342761	3
51	3200160	3

-

-

20/04/2023

SUPREME 43

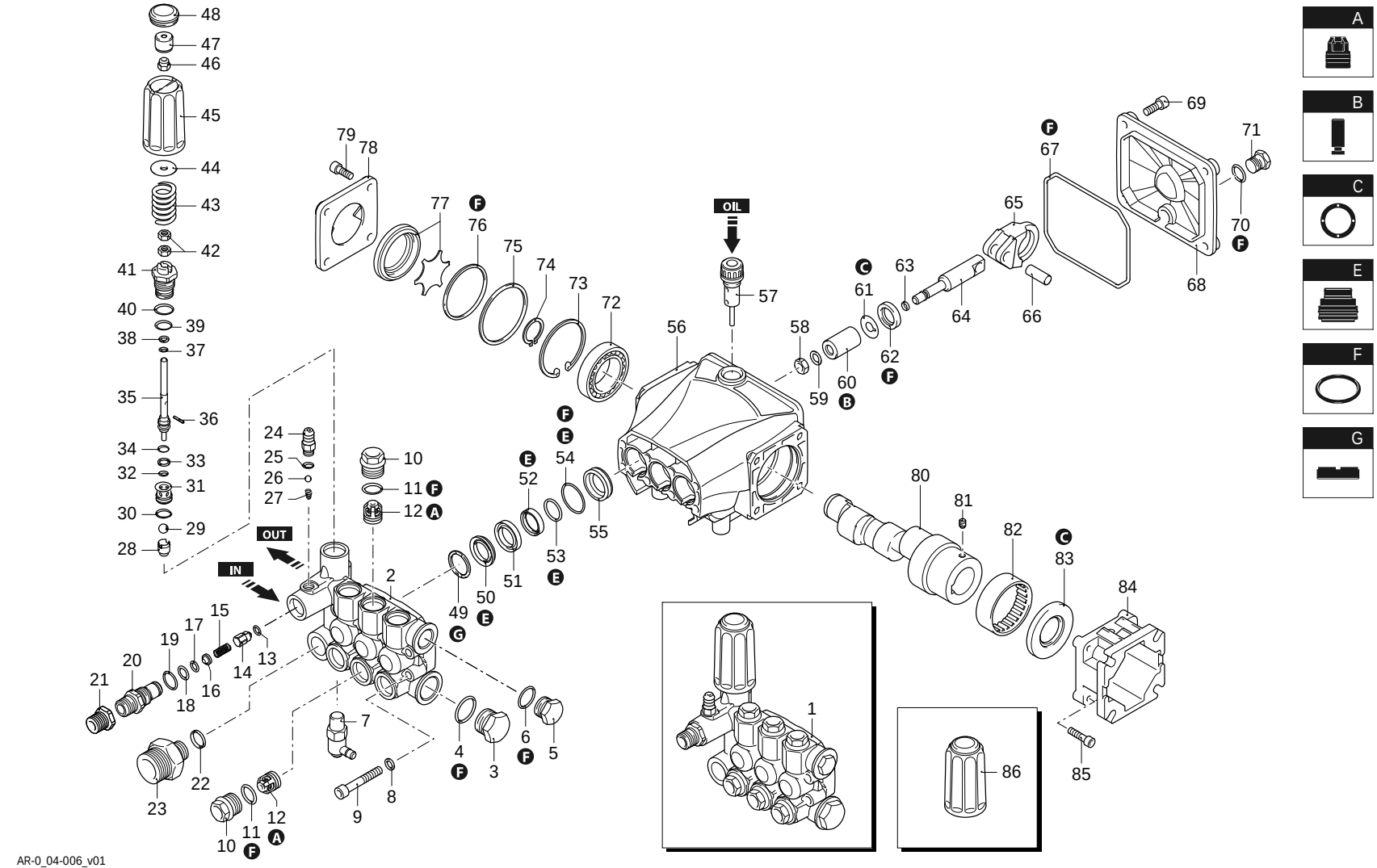

AR-0_04-006_v01

P	Code	Q
52	3200690	3
53	3200700	3
54	770590	3
55	3200150	3
56	3200010	1
57	3201890	1
58	1260110	3
59	1260100	3
60	1260120	3
61	1260091	3
62	1260460	3
63	480480	3
64	3200060	3
65	3200040	3
66	1780050	3
67	2760280	1
68	3200030	1
69	3200220	4
70	820510	1
71	880581	1
72	1780490	1
73	1260790	1
74	1780550	1
75	3201860	1
76	395081	1
77	3209615	1
78	3200070	1
79	1200430	4
80	3200350	1
81	820440	1
82	1321190	1
83	480671	1
84	1320050	1
85	1200430	4
86	42712	1
A	2186	1
B	42475	1
C	42474	1
E	42476	1
F	42470	1
G	2191	1

-

-

20/04/2023

SUPREME 43

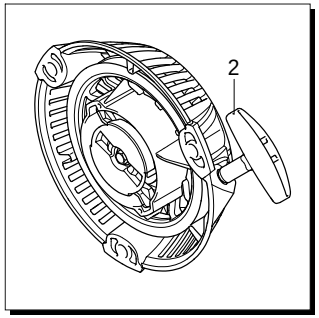

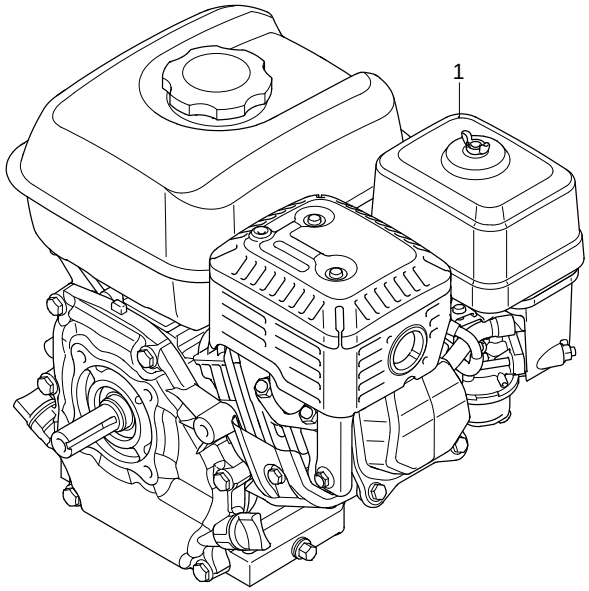

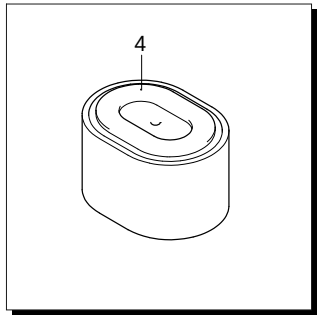

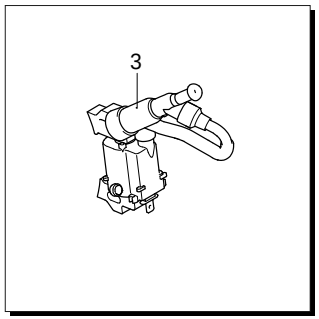

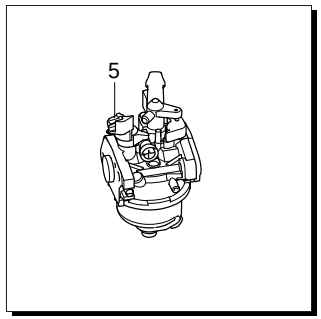

AR-0_05-028_v01

P	Code	Q
1	44986	1
2	52297	1
3	52301	1
4	52296	1
5	52300	1

-

-

20/04/2023

SUPREME 43

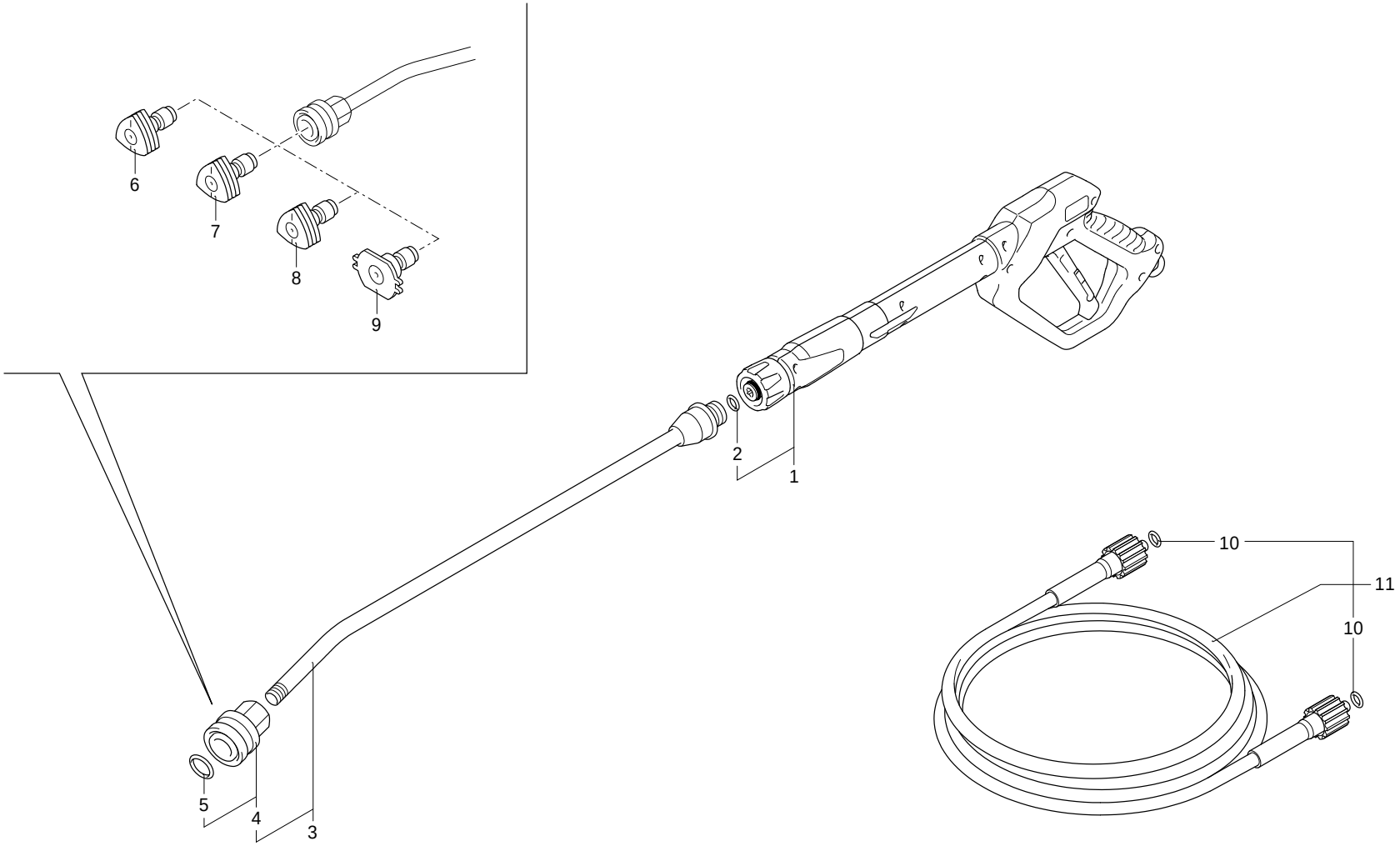

AR-0_02-023_v01

P	Code	Q	
1	47028	1	>I 02/22
1	47039	1	I> 03/22
2	391000	1	
3	3600650	1	
4	46055	1	
5	391002	1	
6	3600350	1	
7	3600360	1	
8	3600380	1	
9	3600400	1	
10	2000570	2	
11	47029	1	>I 02/22
11	3960970	1	I> 03/22

-

-

20/04/2023